HIGH PRESSURE GEAR MOTOR WM900

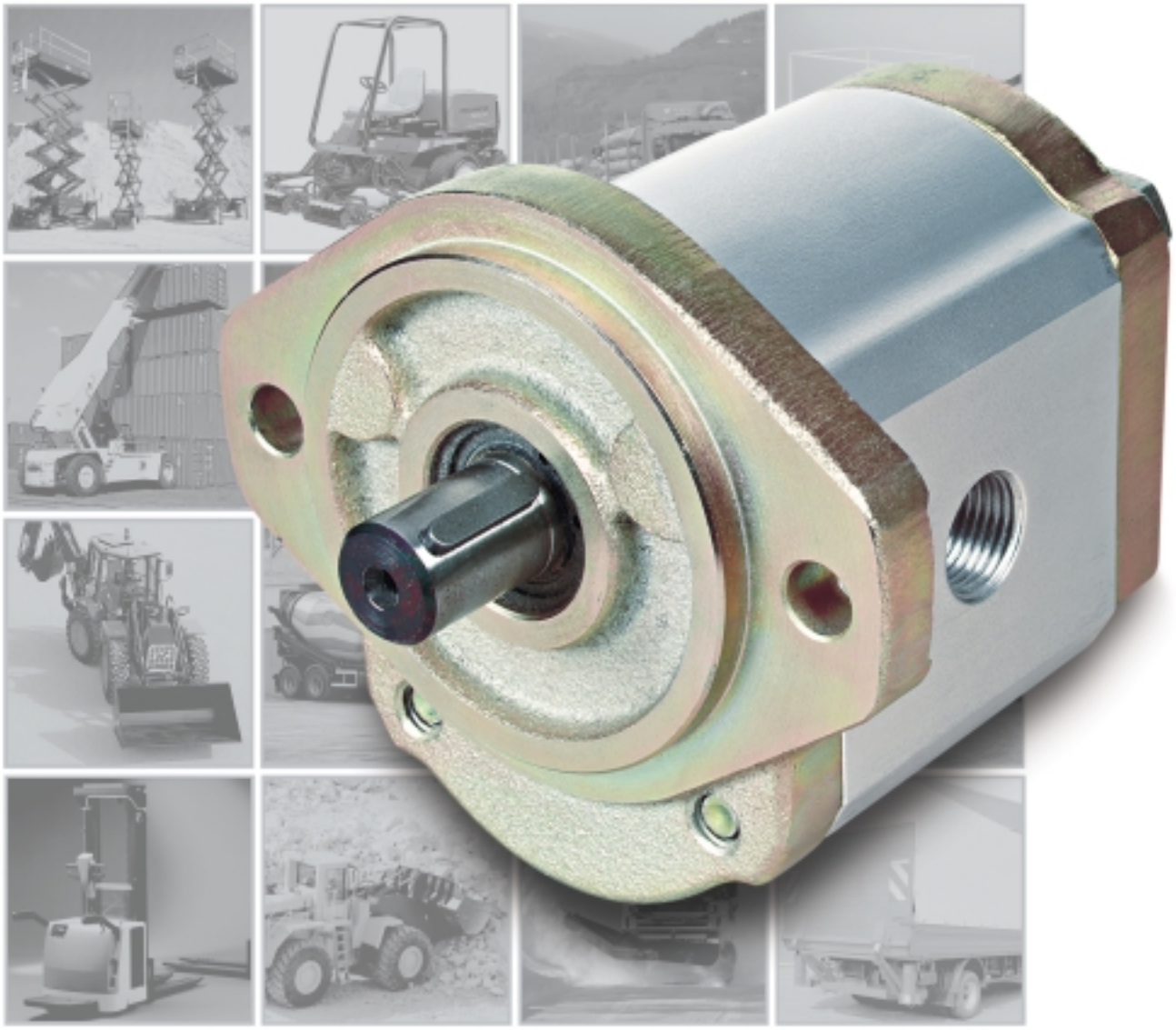

HYDRAULIC SYSTEMS DIVISION

Outstanding Hydraulic Products, Service and Expertise, Worldwide

THE POWER OF THE WM900 A SERIES

Haldex Hydraulicss is one of the world's leading manufacturers of hydraulic pumps and motors. In recent years we have focused on important markets, such as materials handling and vehicles, and now the result is in a series of high-performance hydraulic motors. The WM900 series builds on the versatile technical platform represented by the W series.

WM900 High Pressure Gear Motors are optimised for demanding work, with harsh weather conditions, rugged operations and long service intervals. The WM900 series is a range of cost-efficient group II motors for all applications in which the customer's demands for quality and reliability are particularly high.

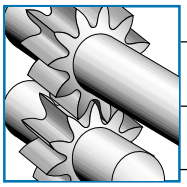

WM900 DESCRIPTION & DATA — 3

FLANGE CODE 03, 06, 07, 07-001M, 07-001V, 10 — 4 - 9

PORT SIZE SPECIFICATION — 10 - 11

PERFORMANCE CURVES — 12 - 13

DRAIN PORT & SHAFT CAPABILITY — 14

INTEGRATED VALVE OPTIONS — 15

Pictures on front page are used with the kind permission of eg: Atlet, BT, Huddig, Scania, Toro and Volvo Construction Equipment.
The right to modifications for technical improvements is reserved.

Model code example for a single motor

WM 09 A 1 C 080 R 03 BA 150 N

① ② ③ ④ ⑤ ⑥ ⑦ ⑧ ⑨ ⑩ ⑪

① = Type
② = Series
③ = Design revision
④ = # of sections
⑤ = Seal material
⑥ = Displacement per section
⑦ = Rotation
⑧ = Mounting flange
⑨ = Drive shaft
⑩ = Portings
⑪ = Valve options

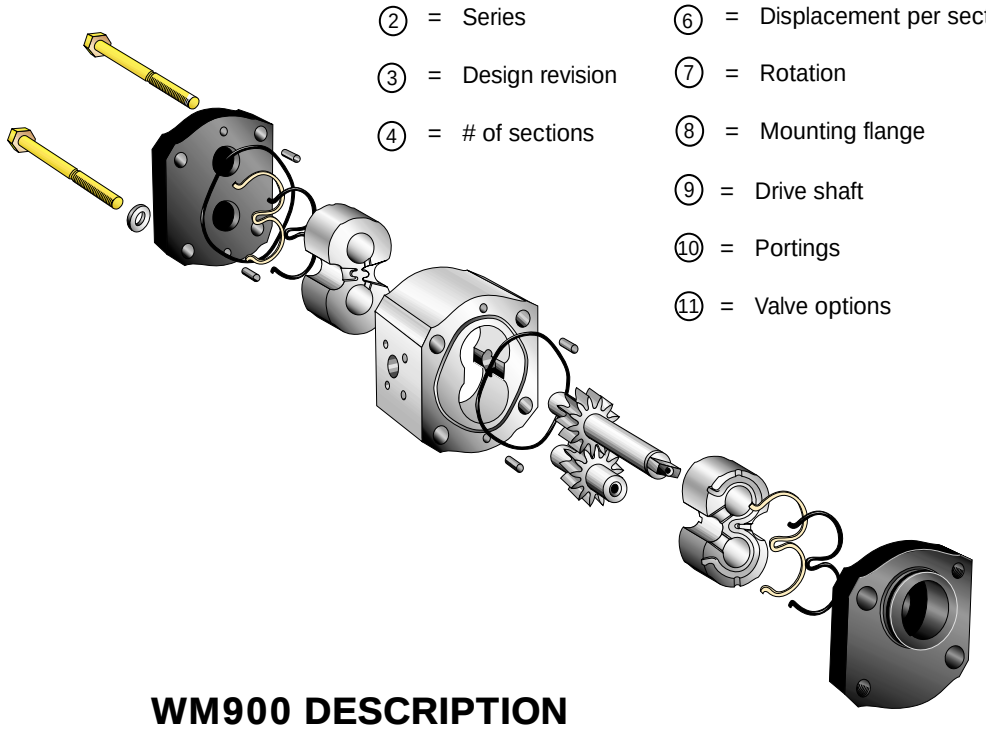

WM900 DESCRIPTION

The WM900 motors are part of the W-family of gear motors, which represent the most advanced motor design from Haldex Hydraulics.

The basic motor is of a three-piece modular design. The motor body is manufactured from high strength aluminium alloy.

For optimum strength, gears and shafts are precision machined as one piece. The 13-tooth gear geometry has been optimised for low noise level. The patented axial pressure compensation ensures an excellent volumetric efficiency at all regular operating conditions (especially for motor applications in series).

Controlled internal oil flow results in continuous lubrication and heat exchange. This enables operation across a wide speed range at very high loads. All shaft-bearing surfaces are Teflon® coated and sizes are calculated for long service life. They also require low pressure to start the motor operation.

For applications with high radial loads and/ or axial loads at the drive shaft motors are available with reinforced front bearings.

A wide range of mounting flanges and port sizes are available to meet European and international standards.

General Data

Displacement V	6 - 31 cc/rev
Speed n	500 - 4000 rpm
Pressure	
rated pressure P_I	up to 276 bar
intermittent pressure P_{II}	up to 300 bar
peak pressure P_{III}	up to 330 bar
Operating temperatures t	up to 105º C
Average volumetric efficiency	97 %

The maximum values for n, P_I and t for a given motor specification may be applied simultaneously dependent on selected motor and its specification.

Options

- SAE mounting flange, rectangular flanges, through bolt model
- Splined, tapered or straight shaft with key
- Threaded or flanged ports
- Reinforced front bearings
- Built-in valves and specials
- Fan drive motor

PERFORMANCE DATA

Operating pressure range

The motors will rotate also at differential pressure Δp<25 bar according to actual conditions. However, for specified motor performance data a continuous differential pressure of Δp>25 bar is required from inlet to outlet.

Maximum pressure at inlet port

Type	Pressure (bar)		
	Rated. p_I	Intermitt. p_{II}	Peak p_{III}
WM09A1-060	276	300	330
WM09A1-080	276	300	330
WM09A1-110	276	300	330
WM09A1-140	276	300	330
WM09A1-160	276	300	330
WM09A1-190	276	300	330
WM09A1-230	221	245	265
WM09A1-270	185	203	220
WM09A1-310	170	185	200

Motors specified for *only one* direction (codes *R* or *L*) with internal drain cannot be loaded at their outlet port by back pressures which exceed the following limits:

P = 10.5 bar continuous,
P = 17.0 bar short time.

If these pressure limits cannot be met you must use bi-directional motors (code B) with external drain. For the external drain port the above mentioned back-pressure limits are still valid. Lead the drain line directly to the oil reservoir. Do not connect it to the return line with filters because of possible back-pressure peaks.

The bi-direction (code B) specified motors have an external drain port as standard, the above mentioned back-pressure limits are also valid for these motors.

Product has been tested to 1.000.000 cycles at p_I. Intermittent pressure p_{II} is permitted at max. 20 sec loaded following 10 sec minimum unloaded.

Product has been tested to 500.000 cycles at p_{III}. Above represents performance, which can be expected from units incorporating flange port styles.

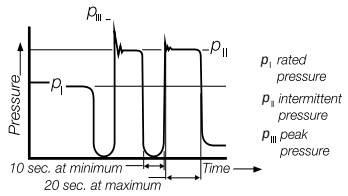

Speed range

Minimum speed for all motor sizes n = 500 rpm at Δp>25 bar.

Maximum speed depends on both motor size and selected ports (see charts from page 4 onwards).

Noise performance

Data according to DIN 45 635.

Typical levels at 200 bar and 2300 rpm using mineral oil with viscosity of 40 mm²/s and at a temperature of 50º C:

WM09A1-080	WM09A1-160	WM09A1-230
60 dB(A)	65 dB(A);	68 dB(A)

Hydraulic fluids

The use of HL-or HLP-hydraulic oils according to DIN 51 524 is recommended.

The permissible viscosity for all WM09 motors ranges from 750 to 10 mm²/s.

The recommended operating viscosity range is from 40 to 16 mm²/s. The permissible cold start viscosity is 2000 mm²/s. We recommend contacting Haldex Hydraulics before using fire resistant or bio-degradable fluids.

Temperature range

Ambient temperature,	min. -25° C
	max. +80° C
Fluid temperature,	
cont. operation,	max. +90° C
short term operation,	max. +105° C

Please note

Viscosity, when operating at above temperature limits, has to remain within the range specified under ”Hydraulic Fluids”.

Fluid cleanliness

Fluid cleanliness according to ISO 4406/1986 Code 18/14 or better is required in order to assure the motor’s high level of efficiency over a long period.

Power take off

Flexible couplings are preferred for direct drives. For higher outboard side loads the motors are available with reinforced front bearing. See pages 7 and 8 as well as page 14.

Mounting position

As required.

Symbols

Single motor uni-directional
Single motor bi-directional

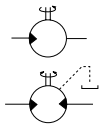

FLANGE CODE 03 (SAE A 2 BOLT)

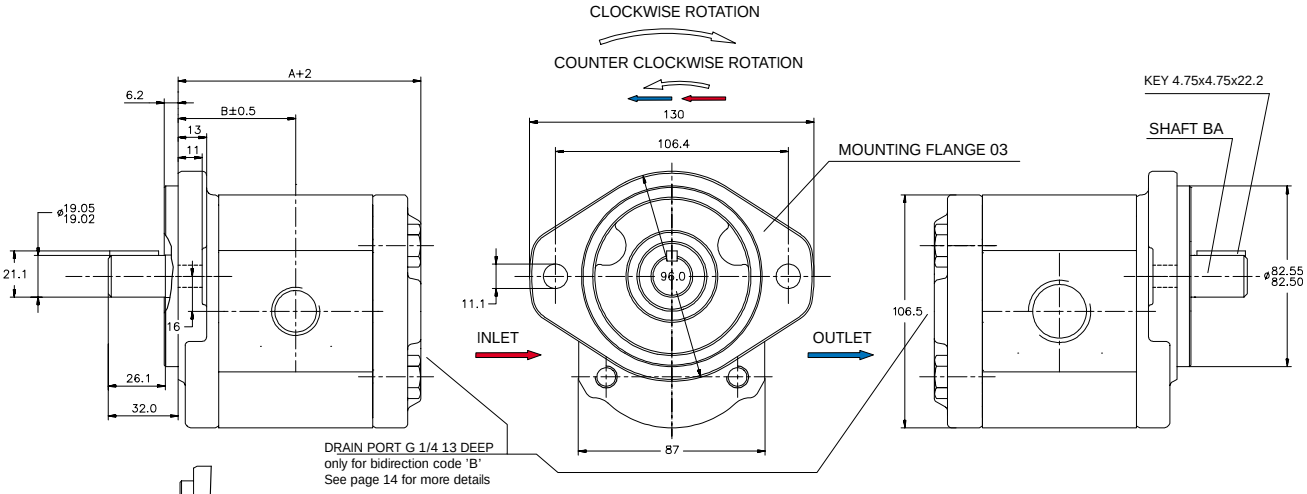

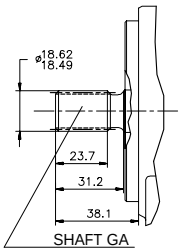

Minimum order quantity 20 pcs

SHAFT GA

EXTERNAL INVOLUTE SPLINE
16/32 DP, 11 TEETH,
FLAT ROOT SIDE FIT

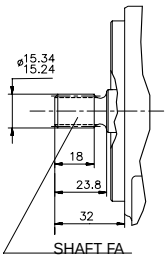

SHAFT FA

EXTERNAL INVOLUTE SPLINE
16/32 DP, 9 TEETH,
FLAT ROOT SIDE FIT
MAX. TORQUE 87 NM

Model code example for a single motor

WM 09 A 1 C 080 R 03 BA 150 N

① ② ③ ④ ⑤ ⑥ ⑦ ⑧ ⑨ ⑩ ⑪

① = Type WM - Motor

② = Series 09 - 900

③ = Design revision A

④ = # of sections 1 - Single
2 - Duplex

⑤ = Seal material C - Buna/Viton

⑥ = Displacement per section
(See Code Displ. below)

⑦ = Rotation
R - Clockwise
L - Counter clockwise
B - Bi-directional

⑧ = Mounting flange
03 SAE A 2-bolt

⑨ = Drive shaft
BA SAE A key Ø 0,75“
GA SAE A Spline11-t
FA SAE A Spline 9-t

⑩ = Portings
see page 10, 11

⑪ = Valve options N – None
Options see page 15

See page 14 for allowable external shaft load

Size	Differential pressure Max Δp_l (bar)	Torque at Δp=10 bar M_t (Nm)	Speed Max/min n [rpm]	Flow, geom at n=1000 rpm Q (litre/min)	Dimensions A [mm]	Dimensions B [mm]	Weight (approx.) [kg]
060 - 6,0cc	276	0.905	4000/500	6	91.6	44.0	3,8
080 - 8,0cc	276	1.16	4000/500	8	94.6	45.5	3,9
110 - 11,0cc	276	1.6	3600/500	11	99.0	47.7	4,1
140 - 14,0cc	276	2.07	3500/500	14	103.5	50.0	4,2
160 - 16,0cc	276	2.35	3300/500	16	106.4	51.4	4,3
190 - 19,0cc	276	2.86	3300/500	19	110.9	53.7	4,4
230 - 23,0cc	221	3.36	3000/500	23	116.8	56.6	4,6
270 - 27,0cc	185	4.05	2800/500	27	122.7	59.6	4,8
310 - 31,0cc	170	4.41	2500/500	31	128.7	62.6	5,0

FLANGE CODE 06 (RECTANGULAR - SMALL PILOT DIA)

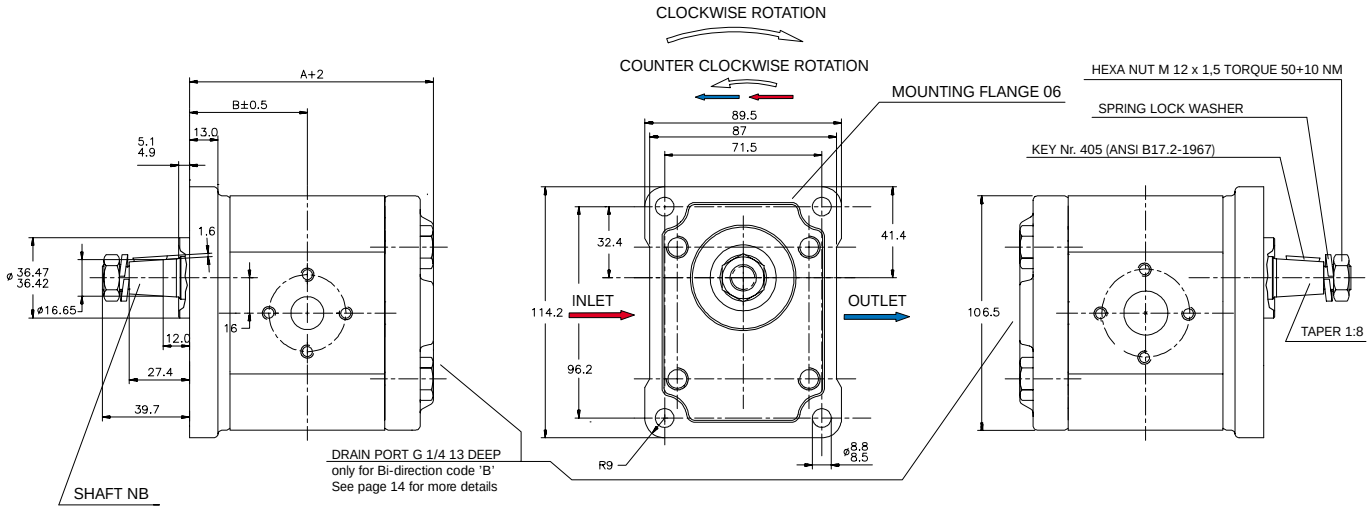

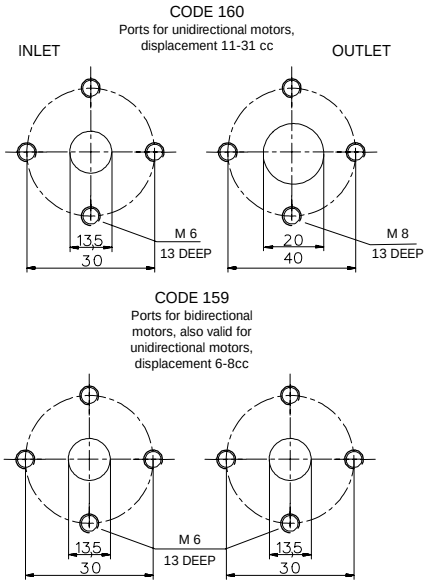

Model code example for a single motor

WM 09 A 1 C 080 R 06 NB 160 N

① ② ③ ④ ⑤ ⑥ ⑦ ⑧ ⑨ ⑩ ⑪

① = Type WM - Motor

② = Series 09 - 900

③ = Design revision A

④ = # of sections 1 - Single
2 - Duplex

⑤ = Seal material C - Buna/Viton

⑥ = Displacement per section
(See Code Displ. below)

⑦ = Rotation
R - Clockwise
L - Counter clockwise
B - Bi-directional

⑧ = Mounting flange
06 Rect. Ø 36,5 mm pilot

⑨ = Drive shaft
NB European Tapered shaft 1:8

⑩ = Portings
see page 10, 11

⑪ = Valve options N – None
Options see page 15

See page 14 for allowable external shaft load

Size	Differential pressure Max Δp_l (bar)	Torque at Δp=10 bar M_t (Nm)	Speed Max/min n [rpm]	Flow, geom at n=1000 rpm Q (litre/min)	Dimensions A [mm]	Dimensions B [mm]	Weight (approx.) [kg]
060 - 6,0cc	276	0.905	4000/500	6	91.6	44.0	3,8
080 - 8,0cc	276	1.16	4000/500	8	94.6	45.5	3,9
110 - 11,0cc	276	1.6	3600/500	11	99.0	47.7	4,1
140 - 14,0cc	276	2.07	3500/500	14	103.5	50.0	4,2
160 - 16,0cc	276	2.35	3300/500	16	106.4	51.4	4,3
190 - 19,0cc	276	2.86	3300/500	19	110.9	53.7	4,4
230 - 23,0cc	221	3.36	3000/500	23	116.8	56.6	4,6
270 - 27,0cc	185	4.05	2800/500	27	122.7	59.6	4,8
310 - 31,0cc	170	4.41	2500/500	31	128.7	62.6	5,0

FLANGE CODE 07 (RECTANGULAR - LARGE PILOT DIA)

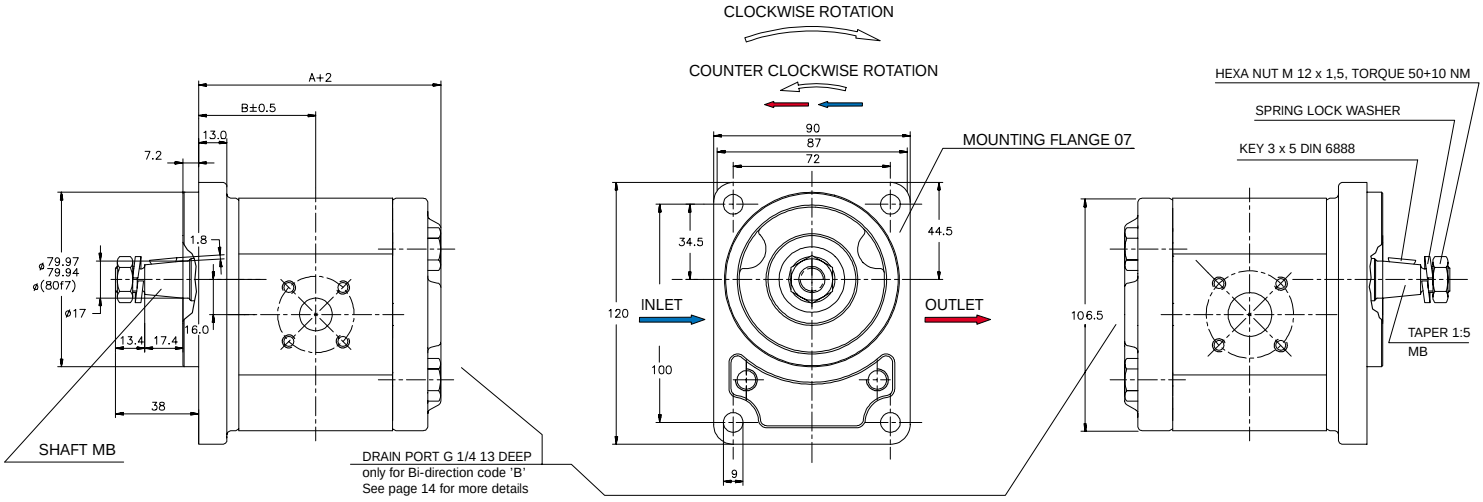

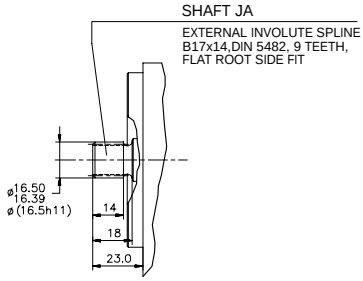

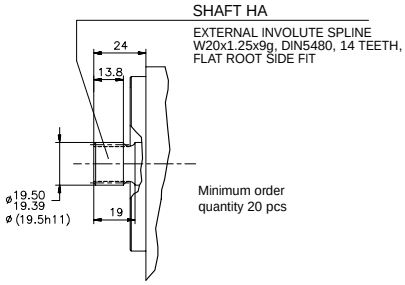

Model code example for a single motor

WM	09	A	1	C	060	R	07	MB	150	N
1	2	3	4	5	6	7	8	9	10	11

1 = Type WM - Motor

2 = Series 09 - 900

3 = Design revision A

4 = # of sections 1 - Single
2 - Duplex

5 = Seal material C - Buna/Viton

6 = Displacement per section
(See Code Displ. below)

7 = Rotation
R - Clockwise
L - Counter clockwise
B - Bi-directional

8 = Mounting flange
07 Rect. Ø 80 mm pilot

9 = Drive shaft
MB European Tapered shaft 1:5
JA DIN 5482 Spline 9-t
HA DIN 5480 Spline 14-t

10 = Portings
see page 10, 11

11 = Valve options N – None
Options see page 15

See page 14 for allowable external shaft load

Size	Differential pressure Max Δp_l (bar)	Torque at Δp=10 bar M_t (Nm)	Speed Max/min n [rpm]	Flow, geom at n=1000 rpm Q (litre/min)	Dimensions A [mm]	Dimensions B [mm]	Weight (approx.) [kg]
060 - 6,0cc	276	0.905	4000/500	6	91.6	44.0	3,8
080 - 8,0cc	276	1.16	4000/500	8	94.6	45.5	3,9
110 - 11,0cc	276	1.6	3600/500	11	99.0	47.7	4,1
140 - 14,0cc	276	2.07	3500/500	14	103.5	50.0	4,2
160 - 16,0cc	276	2.35	3300/500	16	106.4	51.4	4,3
190 - 19,0cc	276	2.86	3300/500	19	110.9	53.7	4,4
230 - 23,0cc	221	3.36	3000/500	23	116.8	56.6	4,6
270 - 27,0cc	185	4.05	2800/500	27	122.7	59.6	4,8
310 - 31,0cc	170	4.41	2500/500	31	128.7	62.6	5,0

FLANGE CODE 07 MODEL WITH REINFORCED FRONT BEARING, CODE 001M

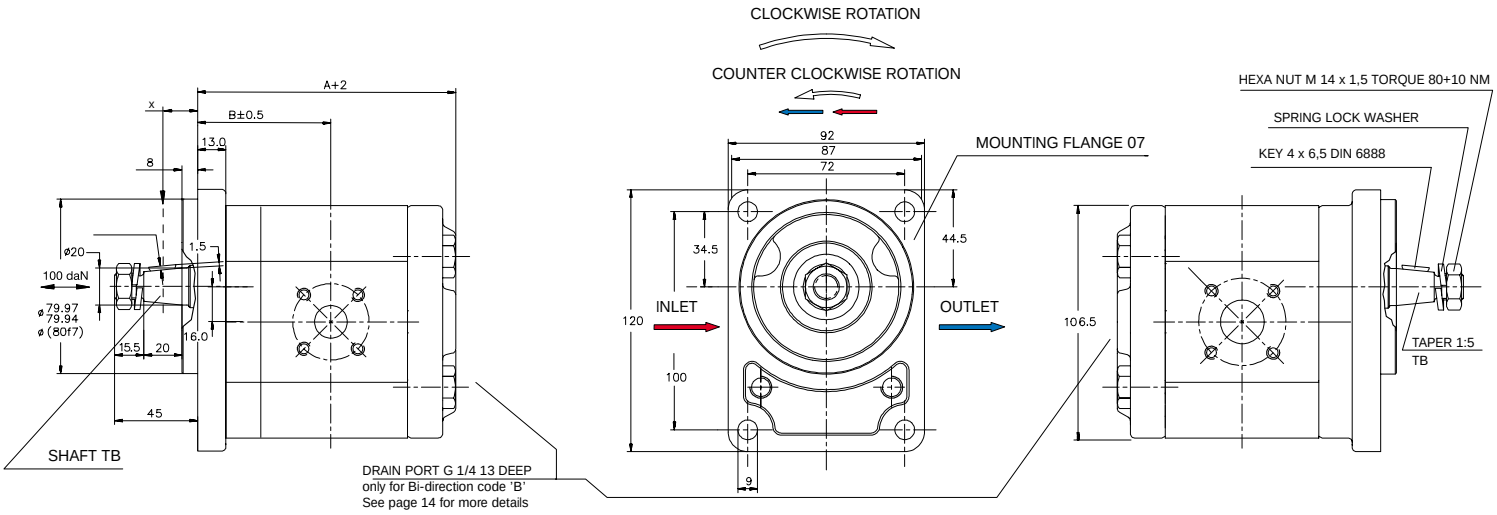

Model code example for a single motor

WM 09 A 1 C 060 R 07 TB 150 N 001M

① ② ③ ④ ⑤ ⑥ ⑦ ⑧ ⑨ ⑩ ⑪ ⑫

① = Type WM - Motor

② = Series 09 - 900

③ = Design revision A

④ = # of sections 1 - Single
2 - Duplex

⑤ = Seal material C - Buna/Viton

⑥ = Displacement per section
(See Code Displ. below)

⑦ = Rotation
R - Clockwise
L - Counter clockwise
B - Bi-directional

⑧ = Mounting flange
07 Rect. Ø 80 mm pilot

⑨ = Drive shaft
TB European Tapered shaft 1:5

⑩ = Portings
see page 10, 11

⑪ = Valve options N – None
Options see page 15

⑫ = Reinforced front bearing 001M

Allowable radial load

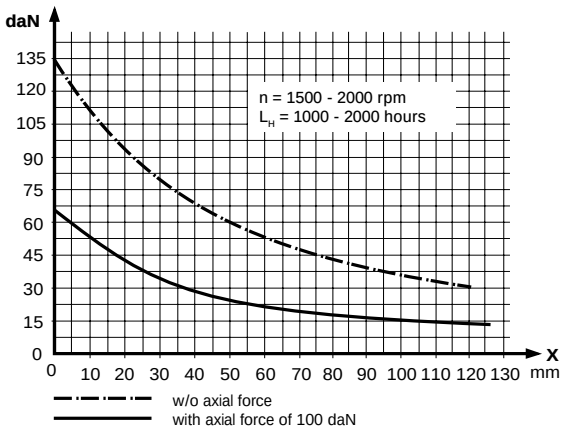

Size	Differential pressure Max Δp_l (bar)	Torque at Δp=10 bar M_t (Nm)	Speed Max/min n [rpm]	Flow, geom at n=1000 rpm Q (litre/min)	Dimensions A [mm]	B [mm]	Weight (approx.) [kg]
060 - 6,0cc	276	0.905	4000/500	6	123.1	75.5	3,8
080 - 8,0cc	276	1.16	4000/500	8	126.1	77.0	3,9
110 - 11,0cc	276	1.6	3600/500	11	130.5	79.2	4,1
140 - 14,0cc	276	2.07	3500/500	14	135.0	81.5	4,2
160 - 16,0cc	276	2.35	3300/500	16	137.9	82,9	4,3
190 - 19,0cc	276	2.86	3300/500	19	142.4	85.2	4,4
230 - 23,0cc	221	3.36	3000/500	23	148.3	88.1	4,6
270 - 27,0cc	185	4.05	2800/500	27	154.2	91.1	4,8
310 - 31,0cc	170	4.41	2500/500	31	160.2	94.1	5,0

FLANGE CODE 07 MODEL WITH REINFORCED FRONT BEARING, CODE 001V

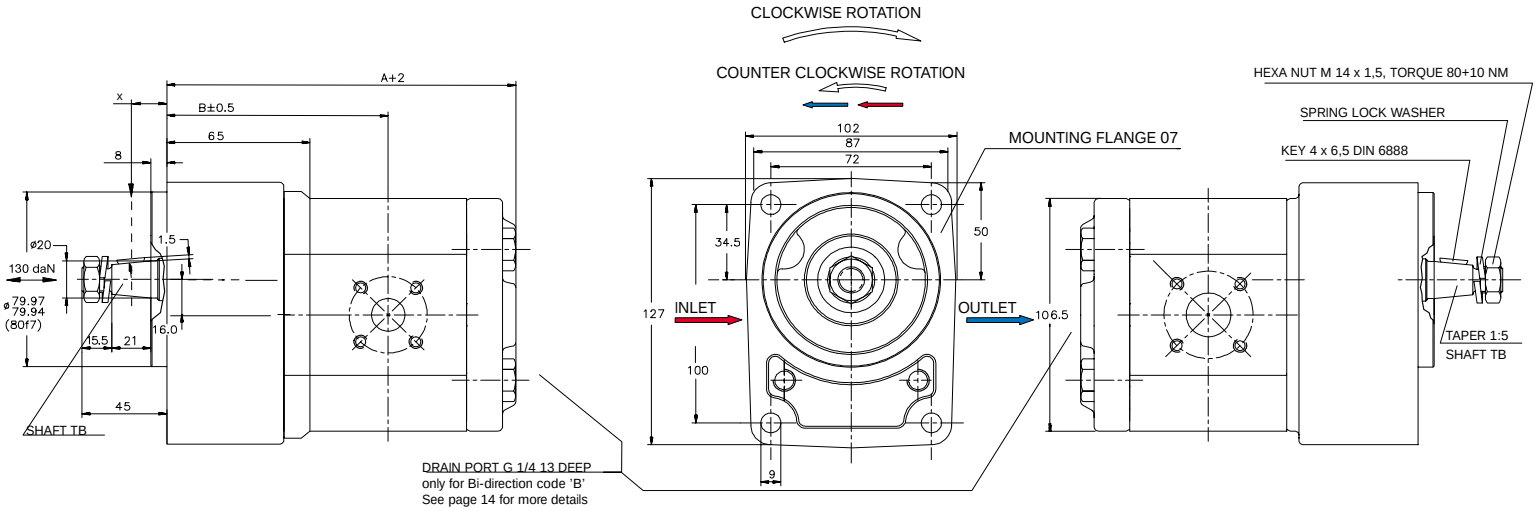

Model code example for a single motor

WM 09 A 1 C 060 R 07 TB 150 N 001V

① ② ③ ④ ⑤ ⑥ ⑦ ⑧ ⑨ ⑩ ⑪ ⑫

① = Type WM - Motor

② = Series 09 - 900

③ = Design revision A

④ = # of sections 1 - Single
2 - Duplex

⑤ = Seal material C - Buna/Viton

⑥ = Displacement per section
(See Code Displ. below)

⑦ = Rotation
R - Clockwise
L - Counter clockwise
B - Bi-directional

⑧ = Mounting flange
07 Rect. Ø 80 mm pilot

⑨ = Drive shaft
TB European Tapered shaft 1:5

⑩ = Portings
see page 10, 11

⑪ = Valve options N – None
Options see page 15

⑫ = Reinforced front bearing 001V

Allowable radial load

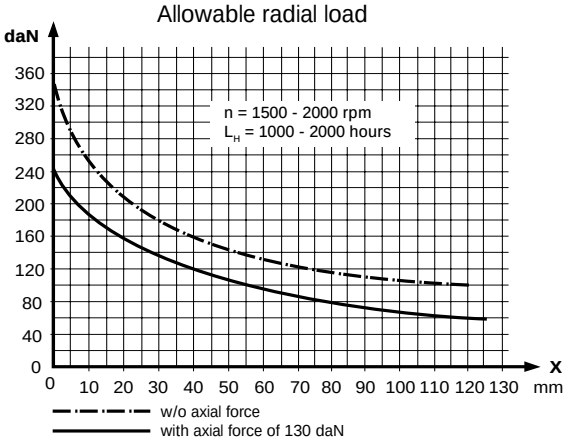

Size	Differential pressure Max Δp_l (bar)	Torque at Δp=10 bar M_t (Nm)	Speed Max/min n [rpm]	Flow, geom at n=1000 rpm Q (litre/min)	Dimensions A [mm]	Dimensions B [mm]	Weight (approx.) [kg]
060 - 6,0cc	276	0.905	4000/500	6	143,6	96,0	4,0
080 - 8,0cc	276	1.16	4000/500	8	146,6	79,5	4,1
110 - 11,0cc	276	1.6	3600/500	11	151,0	99,7	4,3
140 - 14,0cc	276	2.07	3500/500	14	155,5	102,0	4,4
160 - 16,0cc	276	2.35	3300/500	16	158,4	103,4	4,5
190 - 19,0cc	276	2.86	3300/500	19	162,9	105,7	4,6
230 - 23,0cc	221	3.36	3000/500	23	168,8	108,6	4,8
270 - 27,0cc	185	4.05	2800/500	27	174,7	111,6	5,0
310 - 31,0cc	170	4.41	2500/500	31	180,7	114,6	5,2

FLANGE CODE 10 THROUGH - BOLT

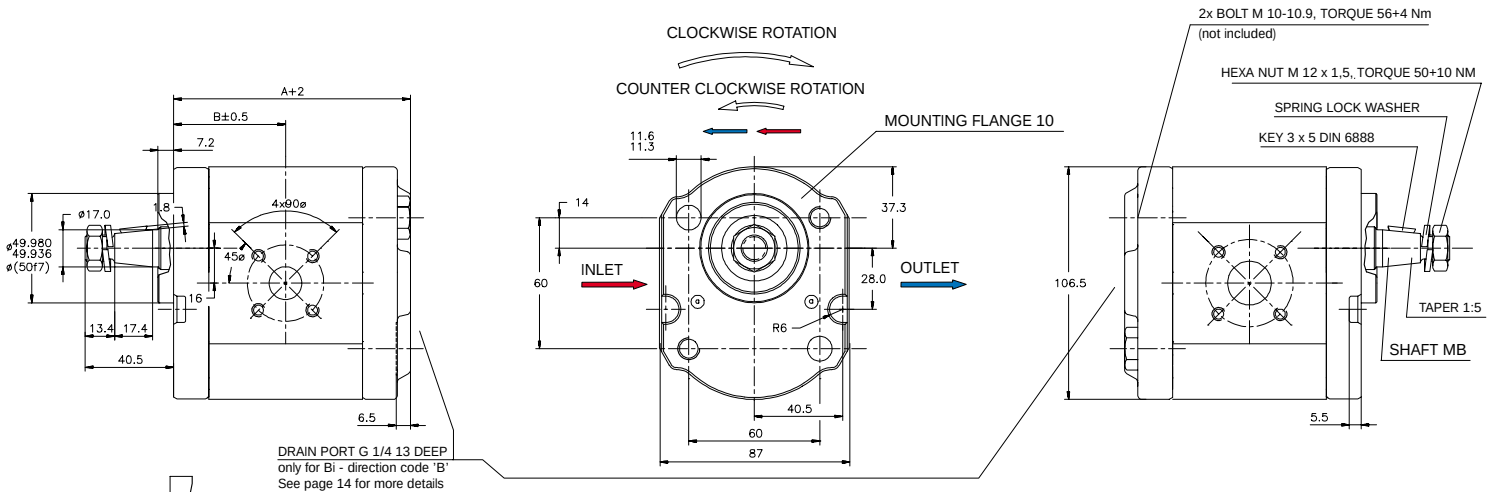

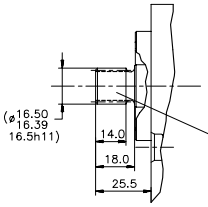

SHAFT JA

EXTERNAL INVOLUTE SPLINE
B17x14, DIN 5482, 9 TEETH,
FLAT ROOT SIDE FIT

Minimum order
quantity 20 pcs

Model code example for a single motor

WM 09 A 1 C 060 R 10 MB 150 N

① ② ③ ④ ⑤ ⑥ ⑦ ⑧ ⑨ ⑩ ⑪

① = Type WM - Motor

② = Series 09 - 900

③ = Design revision A

④ = # of sections 1 - Single
2 - Duplex

⑤ = Seal material C - Buna/Viton

⑥ = Displacement per section
(See Code Displ. below)

⑦ = Rotation
R - Clockwise
L - Counter clockwise
B - Bi-directional

⑧ = Mounting flange
10 Through-bolt Ø 50 mm pilot

⑨ = Drive shaft
MB European Tapered shaft 1:5
JA DIN 5482 Spline 9-t

⑩ = Portings
see page 10, 11

⑪ = Valve options N – None
Options see page 15

See page 14 for allowable external shaft load

Size	Differential pressure Max Δp_l (bar)	Torque at Δp=10 bar M_t (Nm)	Speed Max/min n [rpm]	Flow, geom at n=1000 rpm Q (litre/min)	Dimensions A [mm]	Dimensions B [mm]	Weight (approx.) [kg]
060 - 6,0cc	276	0.905	4000/500	6	89,1	41,5	3,6
080 - 8,0cc	276	1.16	4000/500	8	92,1	43,0	3,7
110 - 11,0cc	276	1.6	3600/500	11	96,5	45,2	3,9
140 - 14,0cc	276	2.07	3500/500	14	101,0	47,5	4,2
160 - 16,0cc	276	2.35	3300/500	16	103,9	48,9	4,3
190 - 19,0cc	276	2.86	3300/500	19	108,4	51,2	4,4
230 - 23,0cc	221	3.36	3000/500	23	114,3	54,1	4,6
270 - 27,0cc	185	4.05	2800/500	27	120,2	57,1	4,8
310 - 31,0cc	170	4.41	2500/500	31	126,2	60,1	5,0

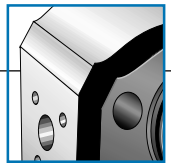

DIMENSIONS FOR REAR PORTS

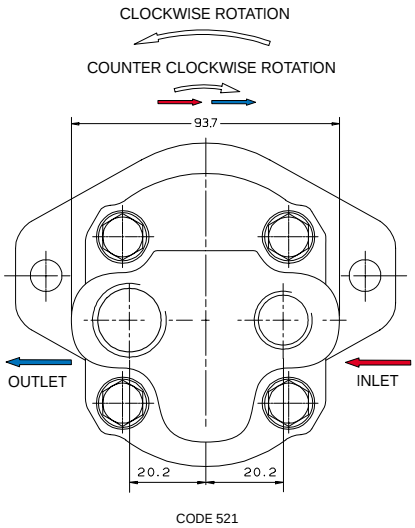

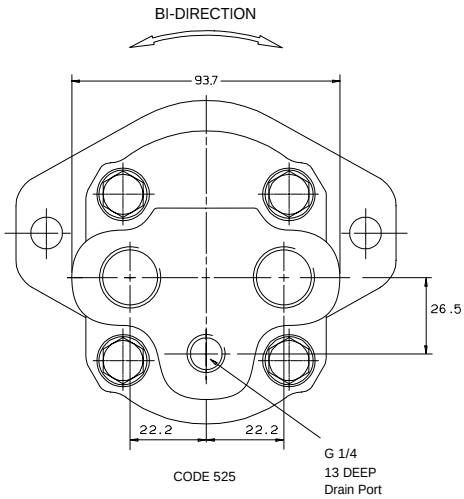

Rear port end cover can be combined with all flange and shaft options.
All technical data from the preceeding and following pages apply to this model, except maximum speed (see table below).
Note always maximum pressure dependent on type, shaft and specials.

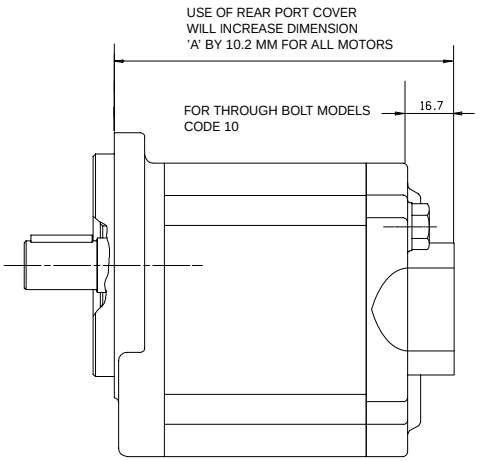

Size	**Rated pressure (bar)**	**Maximum speed (rpm)** Port code 521/525	**Weight (approx.)** [kg]
060 - 6,0cc	can be taken from Tables on pages 4-8	4000	4,0
080 - 8,0cc		4000	4,1
110 - 11,0cc		3600	4,3
140 - 14,0cc		3300	4,4
160 - 16,0cc		3000	4,5
190 - 19,0cc		3000	4,6
230 - 23,0cc		2800	4,8
270 - 27,0cc		2600	5,0
310 - 31,0cc		2300	5,4

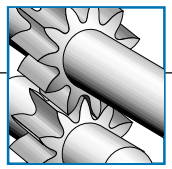

PORT SIZE SPECIFICATION

Mounting flanges	Port options in conjunction with mounting flanges dependent on direction and type (displacement)	Motor version Bi-direction Code B	Motor version Direction Code R or L
		Drain port 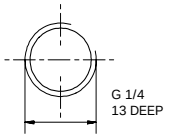	w/o drain port
		INLET (is equal to) OUTLET	INLET OUTLET
03 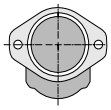 07 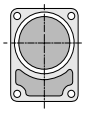 10 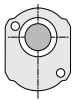	WM09A1-060 WM09A1-080 WM09A1-110 WM09A1-140 WM09A1-160 WM09A1-190 WM09A1-230 optional*	CODE 161 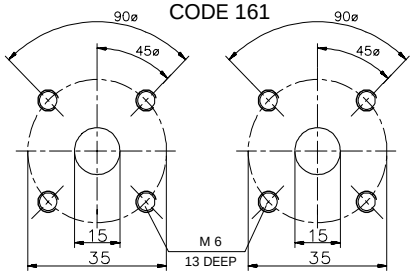	CODE 150 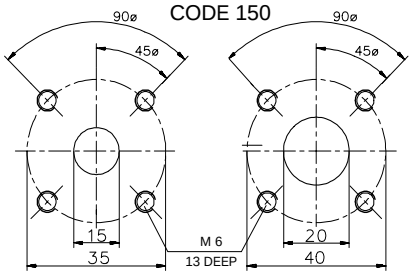
	WM09A1-230 optional** WM09A1-270 WM09A1-310	CODE 163 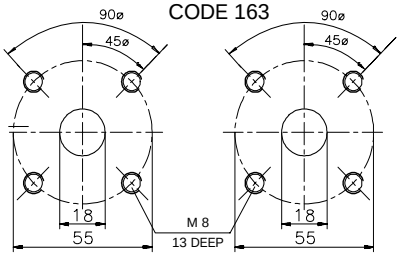	CODE 151 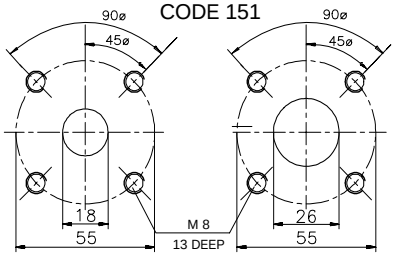
03 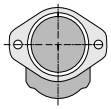	WM09A1-060 WM09A1-080 WM09A1-110 WM09A1-140 WM09A1-160 WM09A1-190 WM09A1-230 optional*	CODE 125***) 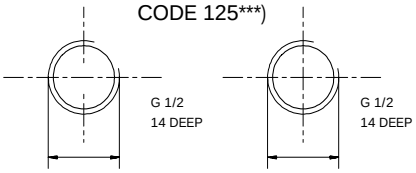	CODE 121***) 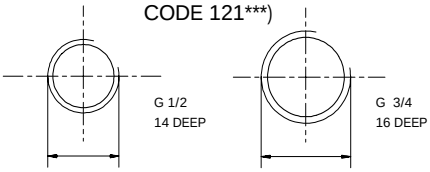
	WM09A1-230 optional** WM09A1-270 WM09A1-310	CODE 126***) 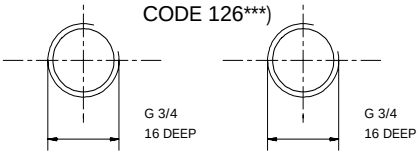	
03 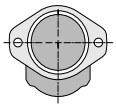 06 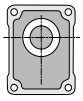 07 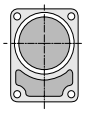 10 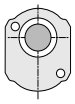	Rear ports WM09A1-060 WM09A1-080 WM09A1-110 WM09A1-140 WM09A1-160 WM09A1-190 WM09A1-230 WM09A1-270 WM09A1-310	CODE 525 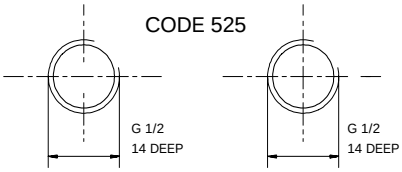 Bi-direction Code B	CODE 521 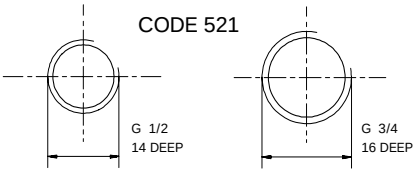 Direction Code R or L

*) up to *n* = 2800 rpm **) up to *n* = 3500 rpm ***) threaded side ports can affect the fatigue lifetime of motor housings. Do not use fittings with metal sealing edge. Do not overtorque the fitting.

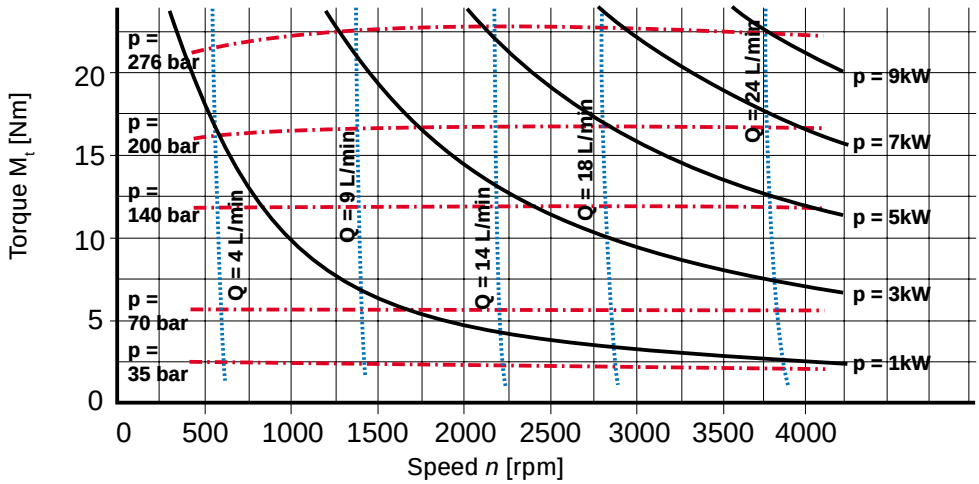

WM09A1-060

All curves on page 12 and 13 refer to an oil viscosity of 30 mm²/s
at an oil temperature of
t = 50°C

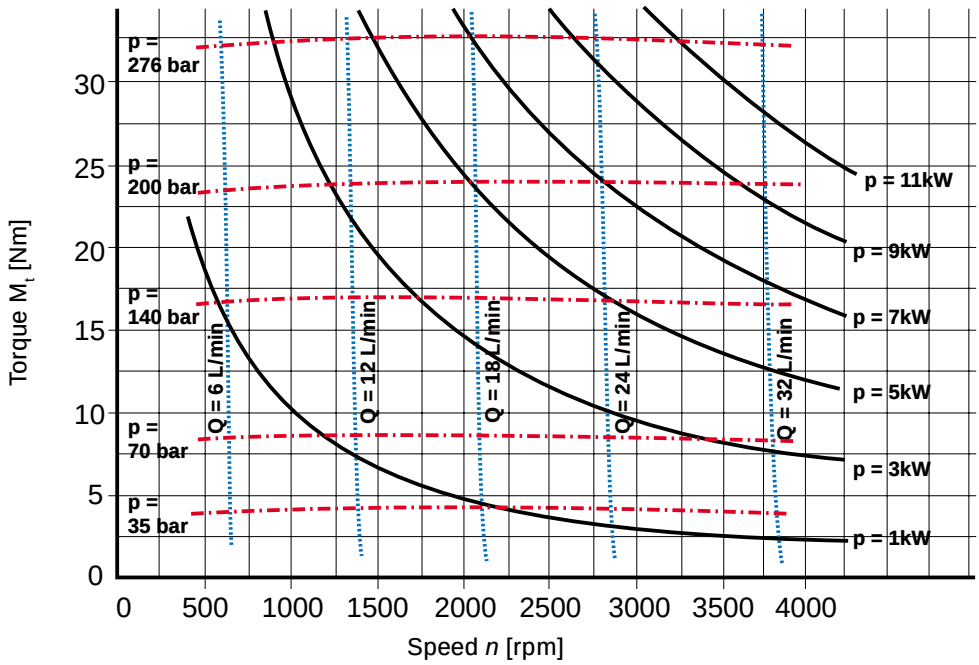

WM09A1-080

See page 15 for formulas to calculate
- Torque
- Performance
- Flow
- Speed
- Differential pressure

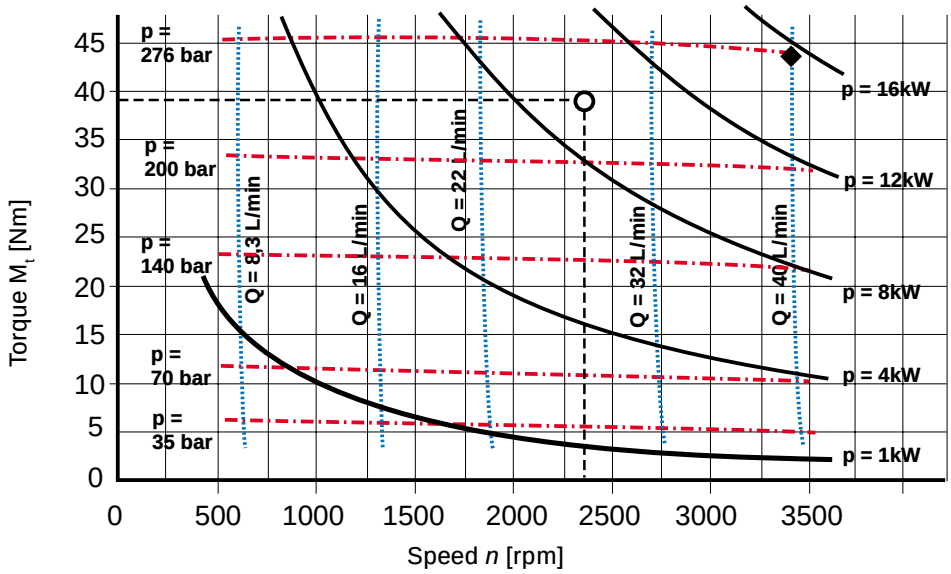

WM09A1-110

Example **O**
given: n = 2300 rpm
P = 9kW
selected displacement:
V = 11 cm³
obtained by diagram:
Q = approx. 27 ltr/min
Δp = approx. 245 bar
M_t = 39 Nm
Example ◆
M_t = 44 Nm
Δp = approx. 276 bar
n = 3400 min⁻¹
selected displacement:
V = 11 cm³
obtained by diagram:
P = approx. 15 kW
Q = approx. 40 ltr/min

WM09A1-140

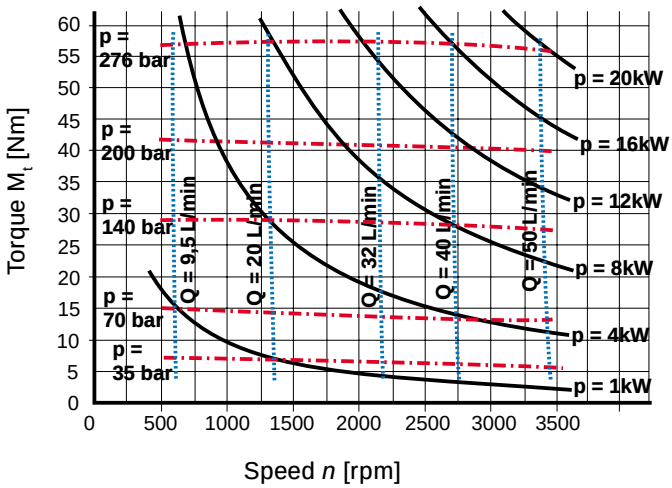

WM09A1-160

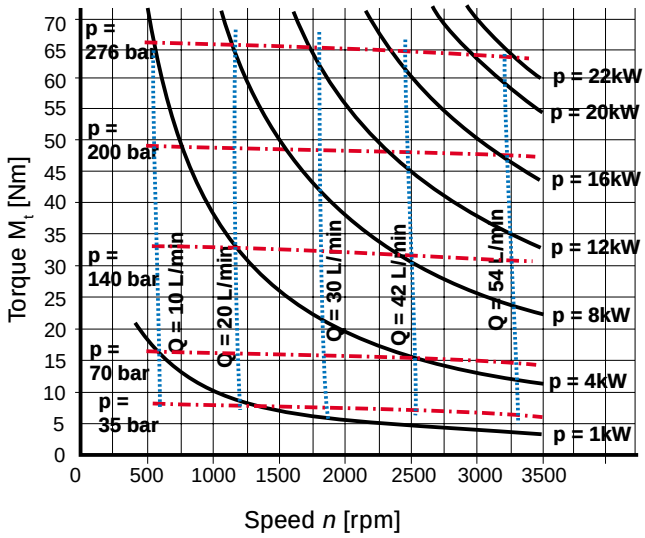

WM09A1-190

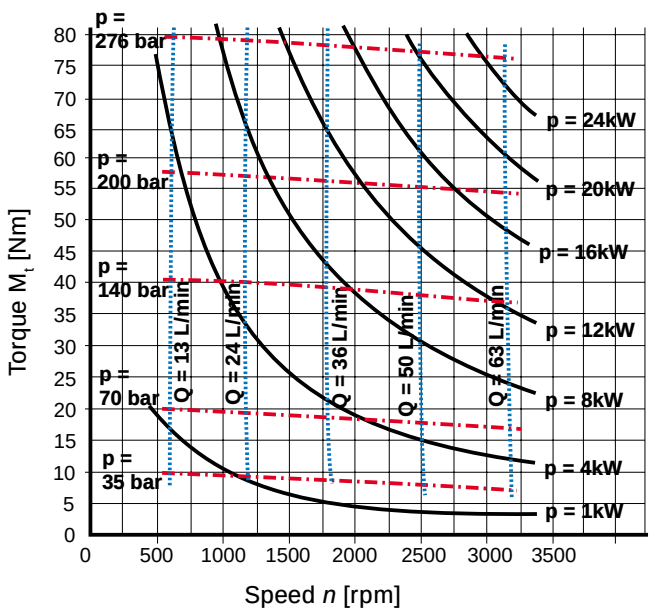

WM09A1-230

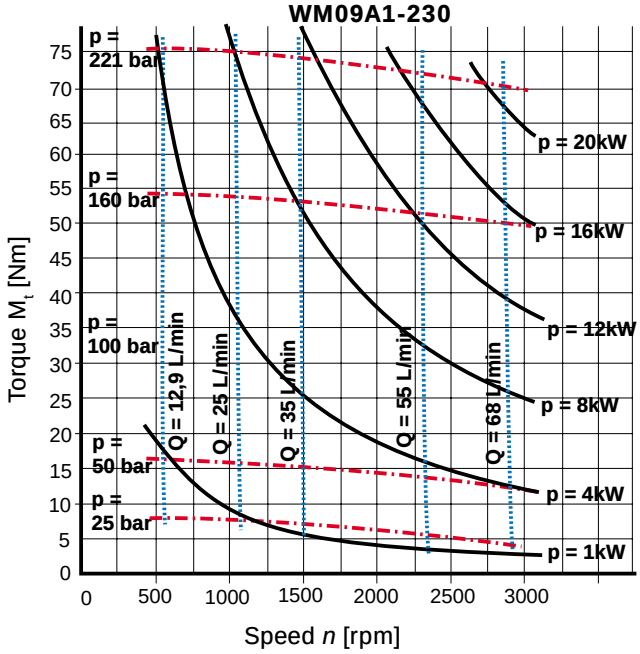

WM09A1-270

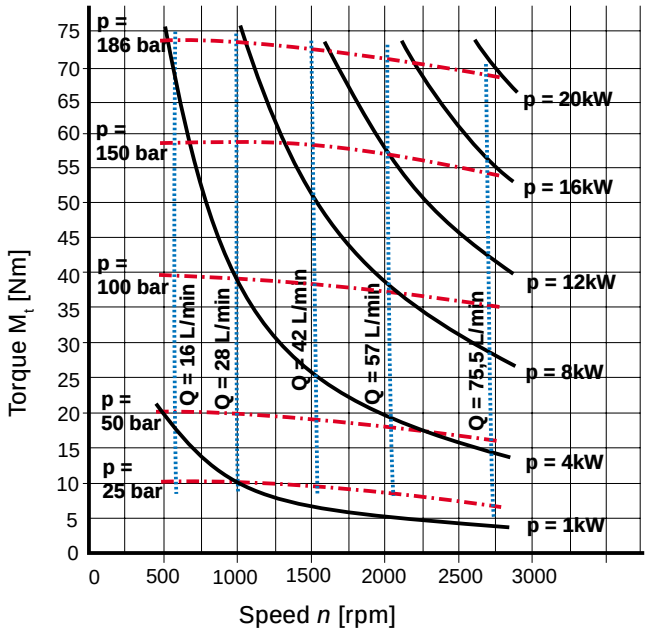

WM09A1-310

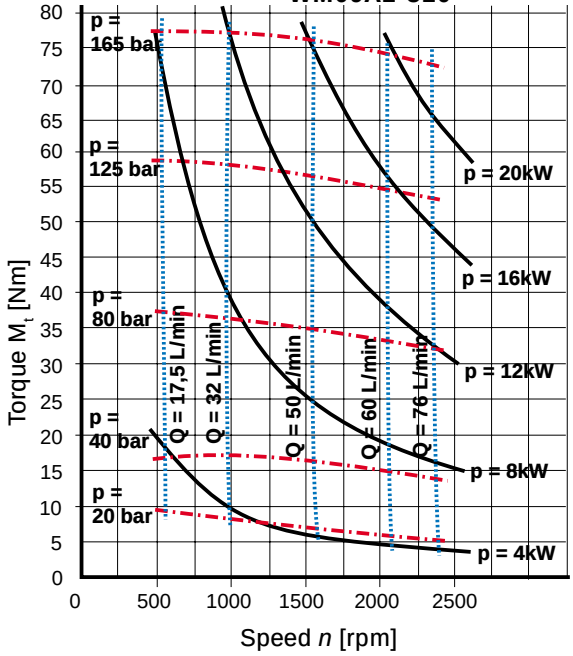

DRAIN PORT POSITIONS FOR LATERAL INLET AND OUTLET

Drain port Standard position
Bi-direction code B

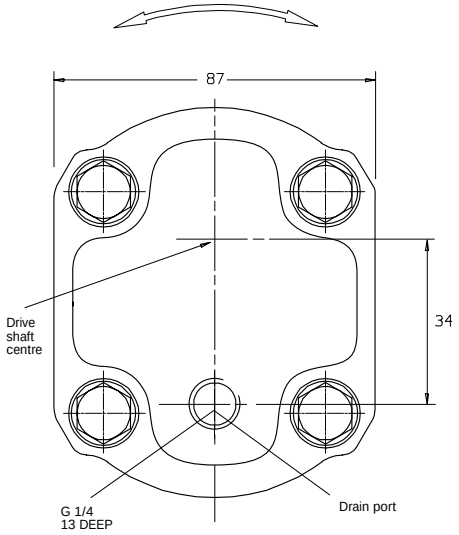

Option "Lateral drain port"
Alternative position "RH" or "LH"
Bi-direction code B

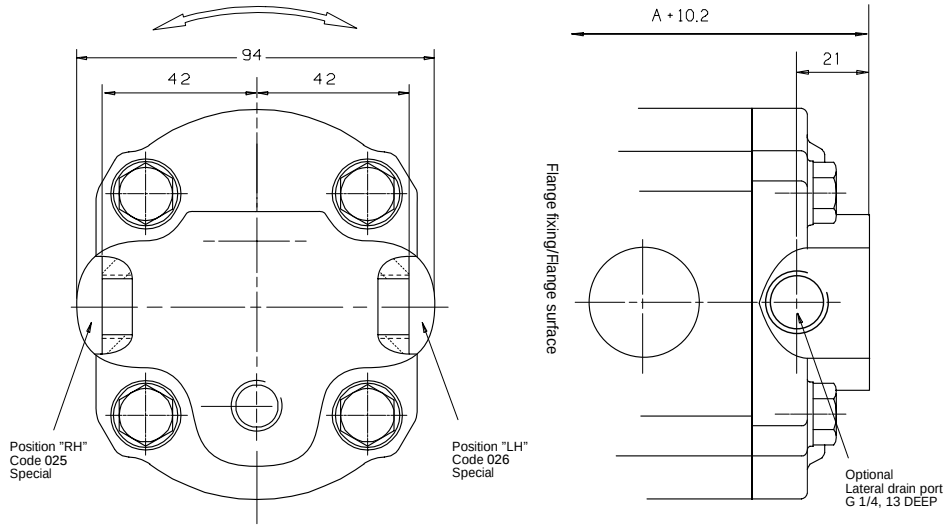

ALLOWABLE RADIAL LOAD AND AXIAL LOAD AT DRIVE SHAFT (W/O REINFORCED FRONT BEARING)

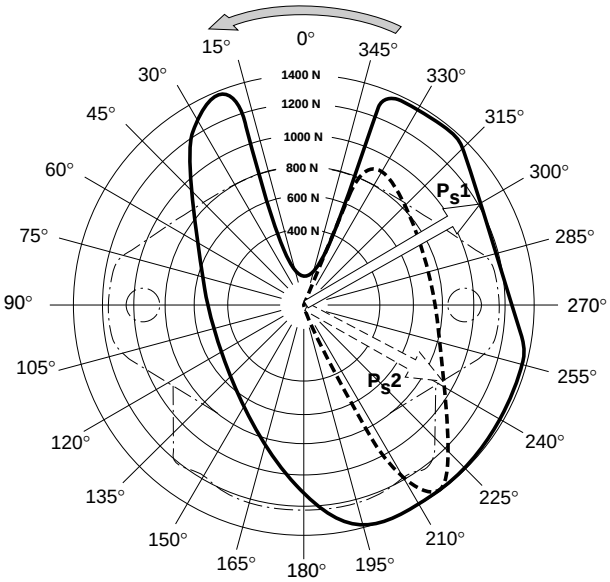

Allowable radial load P_S dependent on direction of force related to motor for counter clockwise rotation, code L.

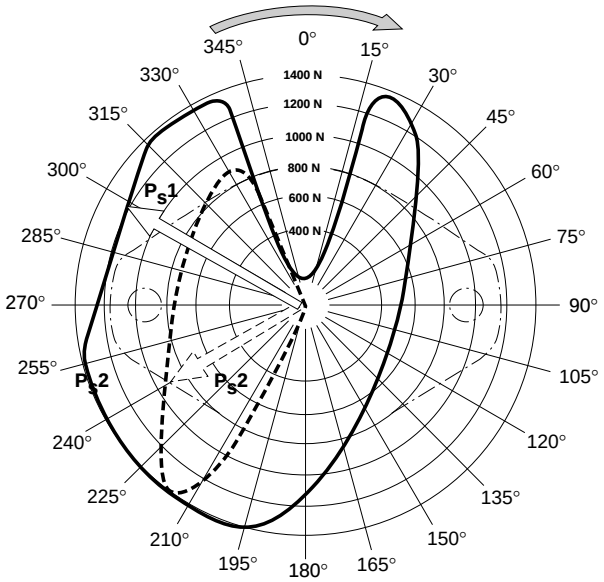

Allowable radial load P_S dependent on direction of force related to motor for clockwise rotation, code R.

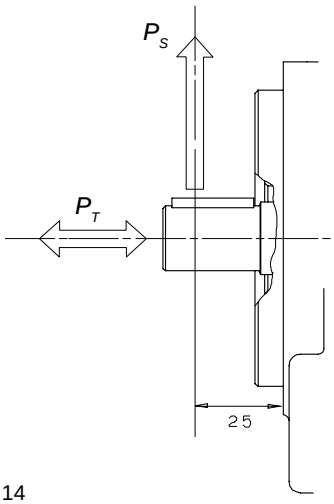

Maximum allowable axial force for both directions
P_T = 700 N
at viscosity of 10 cSt.

Sum of $P_T + P_S$ does not exceed 1050 N if appear simultaneously.

Radial pre-load used at V-belt drive is not permissable for fluid motors w/o reinforced front bearing.

Size	Curve P_s1 < Δp (bar)	Curve P_s2 > Δp (bar)
060 - 6,0cc	276	-
080 - 8,0cc	276	-
110 - 11,0cc	276	-
140 - 14,0cc	200	200
160 - 16,0cc	200	200
190 - 19,0cc	160	160
230 - 23,0cc	160	160
270 - 27,0cc	125	125
310 - 31,0cc	100	100

MOTORS WITH BUILT-IN VALVE FEATURES FOR SPECIAL APPLICATIONS (options)

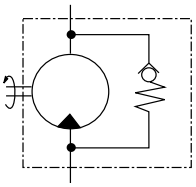

Hydraulic motor for one direction only with built-in anti-cavitation valve.

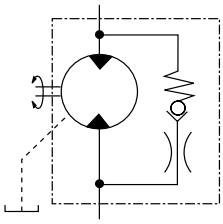

Hydraulic motor for one direction only with built-in anti-cavitation valve. Second direction with bypass-throttle.

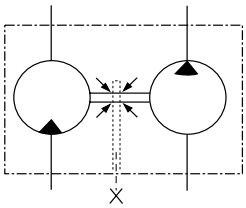

Solid motor-pump-unit for circuits for lubricant or coolant, if other pump drives are too sophisticated. Hydraulic fluid hermetically separated from others.

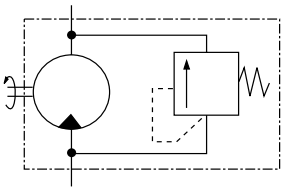

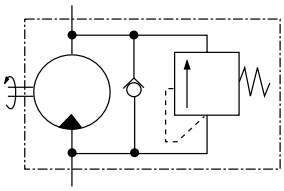

Hydraulic motor for one direction with built-in, non-adjustable pressure relief valve (left) and additional anti-cavitation valve (right). Both types are not released for serial circuits.

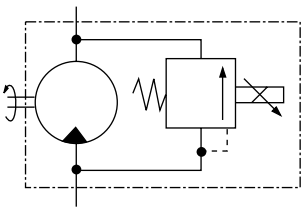

Hydraulic motor for one direction with internal proportional pressure relief valve and optional anti-cavitation valve.

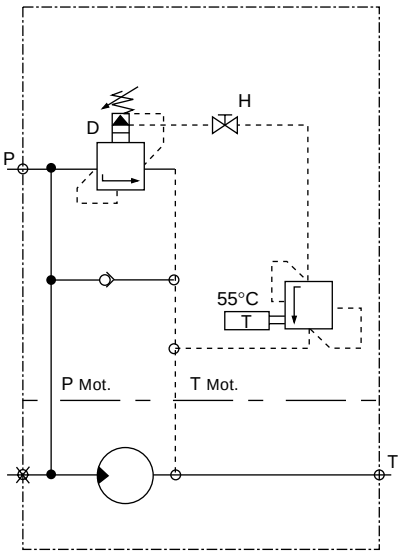

Hydraulic motor with thermo controlled bypassvalve, pressure relief valve and anti-cavitation valve.

Formulas for calculating data of hydraulic motors

Torque Mt_{eff} [Nm]

$$Mt_{eff} = \frac{1{,}59 \cdot V\,[cm^3] \cdot \Delta p\,[bar] \cdot \eta_{mech}}{100}$$

Performance P [kW]

$$P = \frac{Q\,[litre/min] \cdot \Delta p\,[bar] \cdot \eta_{total}}{612}$$

Flow Q_{eff} [litre/min]

$$Q_{eff} = \frac{V\,[cm^3] \cdot n\,[rpm]}{\eta_{volumetric} \cdot 1000}$$

V [cm³] = geometric displacement, see charts

HALDEX WM900 GB-03-03

www.haldex.com

Haldex Hydraulics AB
Industrigatan 6
Box 511
SE-195 25 ARLANDASTAD
Sweden
Tel: +46–8 591 288 50
Fax: +46-8 591 288 60
info.hydraulics.eu@haldex.com

Haldex Hydraulics AB
Ringvägen 3
SE-280 40 SK. FAGERHULT
Sweden
Tel: +46-433 32400
Fax: +46-433 30546
info.hydraulics.eu@haldex.com

Haldex Hydraulics GmbH
Seligenweg 12
Postfach 1507
DE-95014 HOF
Germany
Tel: +49-9281 895-0
Fax: +49-9281 87133
info.hydraulics.eu@haldex.com

Haldex Hydraulics Corp.
2222 15th Street
ROCKFORD, IL 61104
USA
Tel: +1-815 398 4400
Fax: +1-815 398 5977
info.hydraulics.us@haldex.com

Haldex Hydraulics Corp.
214 James Farm Road
Statesville, NC 28625
USA
Tel: +1-704 873 2587
Fax: +1-704 838 7989
info.hydraulics.us@haldex.com

Haldex is an innovator in vehicle technology and supplies proprietary systems and components for trucks, cars and industrial vehicles worldwide. Haldex is listed on the Stockholm Stock Exchange and has yearly sales exceeding 6,5 billion Swedish Krona with 4.000 employees (www.haldex.com).

PRODUCT RANGE

HE Powerpacks
12/24/48 VDC 0.3 – 4.5 kW and 0.75 – 3 kW AC modular power packs

Pressure Switches
5 - 350 bar, connecting/ disconnecting

HE Box Powerpacks
12/24/48 VDC modular powerpacks in weatherproof boxes

W100 Hydraulic pumps
0,5 - 2,0 cc 227 bar

W300 Hydraulic pumps
0.8 – 5.7 cc 230 bar

W600 Hydraulic pumps
3 – 12 cc 276 bar

WM600 Hydraulic motors
3 – 12 cc 276 bar

W900 Hydraulic pumps
5 – 31 cc/section 276 bar

WM900 Hydraulic motors
5 - 31 cc/section 276 bar

WQ900 The quiet pump
5 - 23 cc/section 230 bar

W1500 Hydraulic pumps
19 - 50 cc/section 276 bar

WM1500 Hydraulic motors
19 - 50 cc/section 276 bar

G25 Hydraulic pumps
21.3 – 63 cc/section 250 bar

GPA Internal Gear pumps
1.7 – 63 cc/section 100 bar

GC Hydraulic pumps
1.06 – 11.65 cc/section 275 bar

II-Stage Hydraulic pumps
4.2 – 22.8 cc/section 275 bar

Rotary Flow Dividers
3.8 – 13.3 cc/section 300 bar

G20/G30 (LS) Hydraulic pumps
23 – 161 cc/section 275 bar

Transmission pumps

Fuel pumps